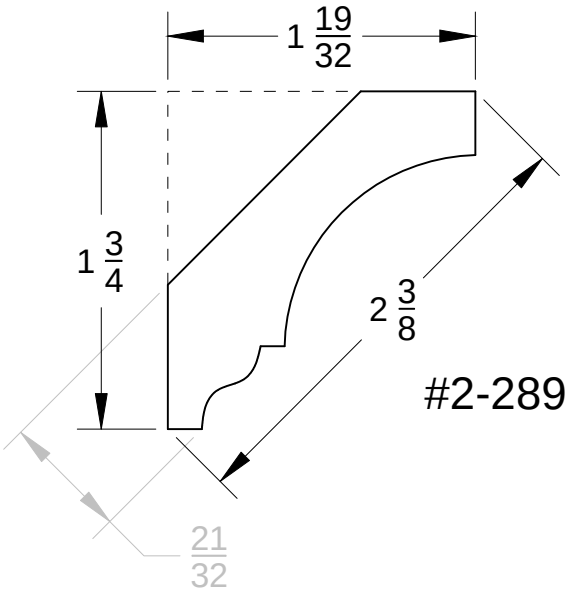

20205 59th Pl S · Kent, WA · (800) 426-0990 · Fax: (253) 872-0747 | 5737 NE Portland Hwy · Portland, OR · (800) 452-1692 · Fax: (503) 281-2791
©2011 Johnson International Industries, Inc. All Rights Reserved.